Model No: **APS350Z-FMI/01** 26/09/04

Description: Intercooler sub-Assembly
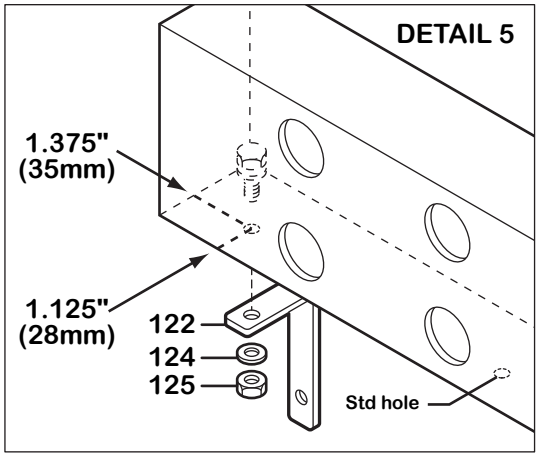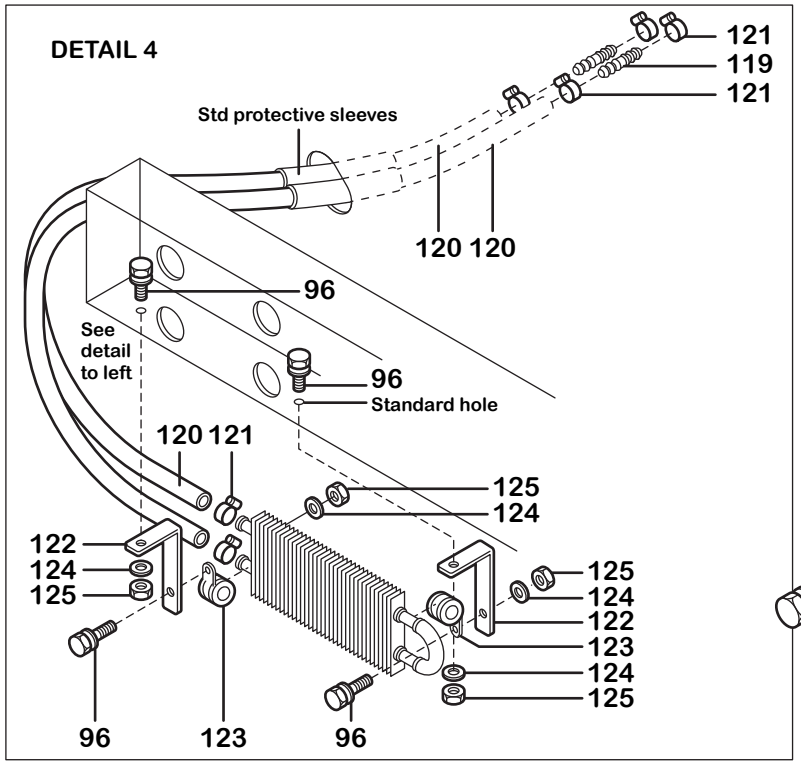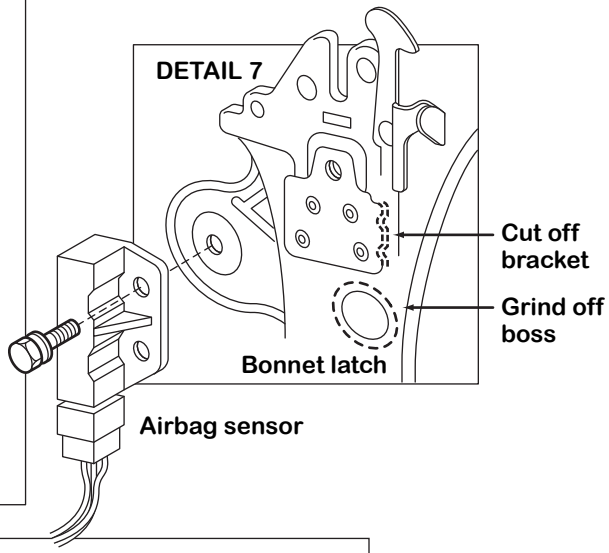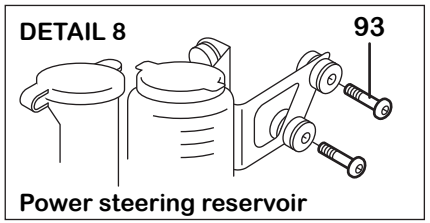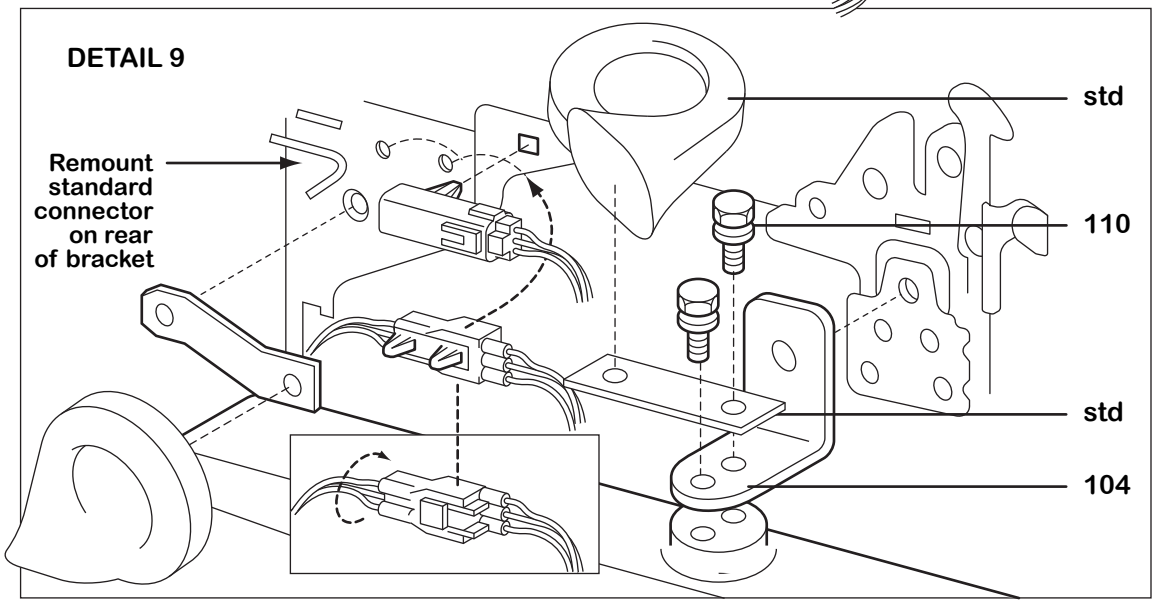
Application: NISSAN 350Z